Work Order ID 68033

Tuesday, April 05, 2011 2:19:34 PM

Item ID: D350-636-012 **Accept** **Setup Start**

Revision ID: **Stop**

Item Name: Skidtube RH

Start Date: 4/5/2011 **Start Qty:** 1.00 **Cust Item ID:**

Required Date: 4/25/2011 **Req'd Qty:** 1.00 **Customer:**

Reference:

Approvals: **Process Plan:** N **Date:** 11-04-5 **Tooling:** **Date:** **Run Start**

QC: **Date:** **SPC (Y/N):** **Date:** **Stop**

Sequence ID/ Work Center ID	Operation Description	Set Up/ Run Hours	Tool ID	Tool #	Plan Code	Accept Qty	Reject Qty	Reject Number	Insp. Stamp
Draw Nbr	**Revision Nbr**								
IIN-D350-636	H								
100		0.00							
DC	DOCUMENT CONTROL								
Document Control	**Memo** Photocopy blue file and type labels per PPP D350-636-012 CHG 006	0.00							

8

for BG 11-6-7

B68033

Dart Aerospace Ltd

W/O:		WORK ORDER CHANGES					
DATE	STEP	PROCEDURE CHANGE	By	Date	Qty	Approval Chief Eng / Prod Mgr	Approval QC Inspector

Part No: _____ **PAR #:** _____ **Fault Category:** _____ **NCR:** Yes No **DQA:** _____ **Date:** _____

Resolution: _____ **Disposition:** _____ **QA: N/C Closed:** _____ **Date:** _____

NCR:		WORK ORDER NON-CONFORMANCE (NCR)						
DATE	STEP	Description of NC Section A	Corrective Action Section B			Verification Section C	Approval Chief Eng	Approval QC Inspector
			Initial Chief Eng	Action Description Chief Eng	Sign & Date			

NOTE: Date & initial all entries

H:\fFORMS\Quality Assurance\approved QA\NCRWO RevE

Work Order ID 68033

Tuesday, April 05, 2011 2:19:34 PM

Item ID: D350-636-012 **Accept** **Setup Start**

Revision ID: **Stop**

Item Name: Skidtube RH

Start Date: 4/5/2011 **Start Qty:** 1.00 **Cust Item ID:**

Required Date: 4/25/2011 **Req'd Qty:** 1.00 **Customer:**

Reference:

Approvals: **Process Plan:** _____ **Date:** _____ **Tooling:** _____ **Date:** _____ **Run Start**

QC: _____ **Date:** _____ **SPC (Y/N):** _____ **Date:** _____ **Stop**

Sequence ID/ Work Center ID	Operation Description	Set Up/ Run Hours	Tool ID	Tool #	Plan Code	Accept Qty	Reject Qty	Reject Number	Insp. Stamp
110		0.00							
Skidtubes	Skidtubes								
Skidtubes	**Memo**	0.00							

1- Pick D2600-3 Bent

2- Deburr FWD and AFT ends, remove bending marks. Scribe batch# inside AFT end per dwg D2750

3- Drill pilot holes for blade fitting bolt holes using DT8983. Open to 0.500", deburr.

4- Locate DT8329 off of blade fitting bolt holes and drill pilot holes for blade fitting

5- Drill only two fwd step holes using DT9616. Ensure proper positioning.

6- Drill pilot holes as per Dwg D2750 sheet 4 (D2750-2 details).Drill using drill Jig DT8150 & DT8863A for first side only DT8863B for second side (detail K)

7- Clecko DT8863B on second side of tube and drill pilot holes for detail B. ***SECOND SIDE***

8-Open up holes for Detail B to 0.375" (4 holes per side)and blade fitting location holes to 0.500" (total of 4 holes per side) as per dwg D2750 .Open up holes for ground handling and detail L to 0.500" (8 holes per side)

9-Drill pilot holes for wearplates as per Dwg D2750 using DT8108 open to 0.297".

10-Open up holes of Detail A to 0.297" (total of 2 holes per side)

BB 11/05/17

Dart Aerospace Ltd

W/O:		WORK ORDER CHANGES					
DATE	STEP	PROCEDURE CHANGE	By	Date	Qty	Approval Chief Eng / Prod Mgr	Approval QC Inspector

Part No: _____ **PAR #:** _____ **Fault Category:** _____ **NCR:** Yes No **DQA:** _____ **Date:** _____

Resolution: _____ **Disposition:** _____ **QA: N/C Closed:** _____ **Date:** _____

NCR:		WORK ORDER NON-CONFORMANCE (NCR)						
DATE	STEP	Description of NC Section A	Corrective Action Section B			Verification Section C	Approval Chief Eng	Approval QC Inspector
			Initial Chief Eng	Action Description Chief Eng	Sign & Date			

NOTE: Date & initial all entries

H:\fFORMS\Quality Assurance\approved QA\NCRWO RevE

Work Order ID 68033

Tuesday, April 05, 2011 2:19:34 PM

Item ID: D350-636-012 **Accept** **Setup Start**

Revision ID: **Stop**

Item Name: Skidtube RH

Start Date: 4/5/2011 **Start Qty:** 1.00 **Cust Item ID:**

Required Date: 4/25/2011 **Req'd Qty:** 1.00 **Customer:**

Reference:

Run Start

Approvals: **Process Plan:** _____ **Date:** _____ **Tooling:** _____ **Date:** _____

Stop

QC: _____ **Date:** _____ **SPC (Y/N):** _____ **Date:** _____

Sequence ID/ Work Center ID	Operation Description	Set Up/ Run Hours	Tool ID	Tool #	Plan Code	Accept Qty	Reject Qty	Reject Number	Insp. Stamp
	11-Weld D2744 Cap as per Dwg D2750 and QSI 004.Fill grooves in bend left from bending as per QSI 004 A/R Aluminum Rod batch: M116577	BG 11/05/17							
	12-Grind welds flush as per Dwg D2750	BB 11/05/17							
120 QC Quality Control	QC10- Inspect visual per QSI004- ground welds	0.00				11.05.18			
	Memo	0.00							
130 QC Quality Control	QC5- Inspect part completeness to step on W/O	0.00				11.05.18			
	Memo	0.00							

Dart Aerospace Ltd

W/O:		WORK ORDER CHANGES					
DATE	STEP	PROCEDURE CHANGE	By	Date	Qty	Approval Chief Eng / Prod Mgr	Approval QC Inspector

Part No: _____ **PAR #:** _____ **Fault Category:** _____ **NCR:** Yes No **DQA:** _____ **Date:** _____

Resolution: _____ **Disposition:** _____ **QA: N/C Closed:** _____ **Date:** _____

NCR:		WORK ORDER NON-CONFORMANCE (NCR)						
DATE	STEP	Description of NC Section A	Corrective Action Section B			Verification Section C	Approval Chief Eng	Approval QC Inspector
			Initial Chief Eng	Action Description Chief Eng	Sign & Date			

NOTE: Date & initial all entries

Work Order ID 68033

Tuesday, April 05, 2011 2:19:34 PM

Item ID: D350-636-012 **Accept** **Setup Start**

Revision ID: **Stop**

Item Name: Skidtube RH

Start Date: 4/5/2011 **Start Qty:** 1.00 **Cust Item ID:**

Required Date: 4/25/2011 **Req'd Qty:** 1.00 **Customer:**

Reference:

Run Start

Approvals: **Process Plan:** _____ **Date:** _____ **Tooling:** _____ **Date:** _____

Stop

QC: _____ **Date:** _____ **SPC (Y/N):** _____ **Date:** _____

Sequence ID/ Work Center ID	Operation Description	Set Up/ Run Hours	Tool ID	Tool #	Plan Code	Accept Qty	Reject Qty	Reject Number	Insp. Stamp
140	Chemical Conversion Coat per QSI005 4.1	0.00				1	ϕ	14	11/05/18
HandFinish	**Memo**	0.00							
Hand Finishing									
150	QC3- Inspect Part Finish	0.00							
QC	**Memo**	0.00							
Quality Control									

11-5-25

Dart Aerospace Ltd

W/O:		WORK ORDER CHANGES					
DATE	STEP	PROCEDURE CHANGE	By	Date	Qty	Approval Chief Eng / Prod Mgr	Approval QC Inspector

Part No: _____ PAR #: _____ Fault Category: _____ NCR: Yes No DQA: _____ Date: _____

Resolution: _____ Disposition: _____ QA: N/C Closed: _____ Date: _____

NCR:		WORK ORDER NON-CONFORMANCE (NCR)						
DATE	STEP	Description of NC Section A	Corrective Action Section B			Verification Section C	Approval Chief Eng	Approval QC Inspector
			Initial Chief Eng	Action Description Chief Eng	Sign & Date			

NOTE: Date & initial all entries

H:\fFORMS\Quality Assurance\approved QA\NCRWO RevE

Work Order ID 68033

Tuesday, April 05, 2011 2:19:34 PM

Item ID: D350-636-012 **Accept** **Setup Start** **Stop**

Revision ID:

Item Name: Skidtube RH

Start Date: 4/5/2011 **Start Qty:** 1.00 **Cust Item ID:**

Required Date: 4/25/2011 **Req'd Qty:** 1.00 **Customer:**

Reference:

Approvals: **Process Plan:** _____ **Date:** _____ **Tooling:** _____ **Date:** _____ **Run Start** **Stop**

QC: _____ **Date:** _____ **SPC (Y/N):** _____ **Date:** _____

Sequence ID/ Work Center ID	Operation Description	Set Up/ Run Hours	Tool ID	Tool #	Plan Code	Accept Qty	Reject Qty	Reject Number	Insp. Stamp
160	Skidtubes	0.00							
Skidtubes		0.00							
Skidtubes									

Memo

1-Open up holes of Detail L and ground handling to 0.625" (total of 8 holes per side) as per dwg D2750.

2-Open up holes of Detail K to 0.750" (total of 4 holes per side) as per dwg D2750.

3-Open float holes to .500" (4 per Side)

4-Chamfer holes of Detail K, L, ground handling and float holes per dwg D2750 (welding instructions on sheet 9)

5-Deburr and blow out all chips from inside of tube

6-Prepare tube for welding, remove alodine as required.

BB 11/05/19

7-Bond web D2739 in place as per QSI 015
A/R ☐ Sikaflex-291 batch: 1175/16 ☐☐
exp. date: 12/04/15

DH 11/05/25

8- Weld spacers D3490-1, D3490-3 and D2743 as per dwg D2750 & QSI004 (welding instructions on sheet 9)
A/R☐ Aluminum Rod batch: M116577

BE 11/05/26

9- At section AP-AP drill out x-bolt spacer to 0.404"

BE 11/05/26

10-Grind welds flush as per Dwg D2750

DP 11-5-30

11-Spot face ground handling holes section (total of 4 places per side) as per

BB 11/05/31

Dart Aerospace Ltd

W/O:		WORK ORDER CHANGES					
DATE	STEP	PROCEDURE CHANGE	By	Date	Qty	Approval Chief Eng / Prod Mgr	Approval QC Inspector

Part No: _____ **PAR #:** _____ **Fault Category:** _____ **NCR:** Yes No **DQA:** _____ **Date:** _____

Resolution: _____ **Disposition:** _____ **QA: N/C Closed:** _____ **Date:** _____

NCR:		WORK ORDER NON-CONFORMANCE (NCR)						
DATE	STEP	Description of NC Section A	Corrective Action Section B			Verification Section C	Approval Chief Eng	Approval QC Inspector
			Initial Chief Eng	Action Description Chief Eng	Sign & Date			

NOTE: Date & initial all entries

Work Order ID 68033

Tuesday, April 05, 2011 2:19:34 PM

Item ID: D350-636-012 **Accept** **Setup Start** **Stop**

Revision ID:

Item Name: Skidtube RH

Start Date: 4/5/2011 **Start Qty:** 1.00 **Cust Item ID:**

Required Date: 4/25/2011 **Req'd Qty:** 1.00 **Customer:**

Reference:

Run Start **Stop**

Approvals: **Process Plan:** _____ **Date:** _____ **Tooling:** _____ **Date:** _____

QC: _____ **Date:** _____ **SPC (Y/N):** _____ **Date:** _____

Sequence ID/ Work Center ID	Operation Description	Set Up/ Run Hours	Tool ID	Tool #	Plan Code	Accept Qty	Reject Qty	Reject Number	Insp. Stamp
	dwg D2750								
	12-Deburr holes	BB		11/05/31					
170	QC10- Inspect visual per QSI004- ground welds	0.00							
QC	Memo	0.00	8 11/05/31						
Quality Control									
180	QC5- Inspect part completeness to step on W/O	0.00							
QC	Memo	0.00	8 11/05/31						
Quality Control									

Dart Aerospace Ltd

W/O:		WORK ORDER CHANGES					
DATE	STEP	PROCEDURE CHANGE	By	Date	Qty	Approval Chief Eng / Prod Mgr	Approval QC Inspector

Part No: _____ **PAR #:** _____ **Fault Category:** _____ **NCR:** Yes No **DQA:** _____ **Date:** _____

Resolution: _____ **Disposition:** _____ **QA: N/C Closed:** _____ **Date:** _____

NCR:		WORK ORDER NON-CONFORMANCE (NCR)						
DATE	STEP	Description of NC Section A	Corrective Action Section B			Verification Section C	Approval Chief Eng	Approval QC Inspector
			Initial Chief Eng	Action Description Chief Eng	Sign & Date			

NOTE: Date & initial all entries

H:\fFORMS\Quality Assurance\approved QA\NCRWO RevE

Work Order ID 68033

Tuesday, April 05, 2011 2:19:34 PM

Item ID: D350-636-012 **Accept** **Setup Start** **Stop**

Revision ID:

Item Name: Skidtube RH

Start Date: 4/5/2011 **Start Qty:** 1.00 **Cust Item ID:**

Required Date: 4/25/2011 **Req'd Qty:** 1.00 **Customer:**

Reference:

Approvals: **Process Plan:** _____ **Date:** _____ **Tooling:** _____ **Date:** _____ **Run Start** **Stop**

QC: _____ **Date:** _____ **SPC (Y/N):** _____ **Date:** _____

Sequence ID/ Work Center ID	Operation Description	Set Up/ Run Hours	Tool ID	Tool #	Plan Code	Accept Qty	Reject Qty	Reject Number	Insp. Stamp
190	Pressure Wash per QSI005 4.3	0.00							
HandFinish	**Memo**	0.00							
Hand Finishing	Re-alodine tube as per QSI 005 section 4.1.2.1 do not acid etch.								
200	White Gloss(Ref:4.3.5.1) per QSI005 4.3-Alum	0.00							
Powdercoat	**Memo**	0.00							
Powder Coating	START TIME: 8:20 OVEN TEMPERATURE: 320 °F FINISH TIME: 8:50								
M116964									
210	QC3- Inspect Part Finish	0.00							
QC	**Memo**	0.00							
Quality Control	Inspect for foreign object per QSI 024								

1X Ø M-L 11/06/01

1X Ø M-L 11/06/06

1 Ø M 11/06/06

Dart Aerospace Ltd

W/O:		WORK ORDER CHANGES					
DATE	STEP	PROCEDURE CHANGE	By	Date	Qty	Approval Chief Eng / Prod Mgr	Approval QC Inspector

Part No: _____ **PAR #:** _____ **Fault Category:** _____ **NCR:** Yes No **DQA:** _____ **Date:** _____

Resolution: _____ **Disposition:** _____ **QA: N/C Closed:** _____ **Date:** _____

NCR:		WORK ORDER NON-CONFORMANCE (NCR)						
DATE	STEP	Description of NC Section A	Corrective Action Section B			Verification Section C	Approval Chief Eng	Approval QC Inspector
			Initial Chief Eng	Action Description Chief Eng	Sign & Date			

NOTE: Date & initial all entries

H:\fFORMS\Quality Assurance\approved QA\NCRWO RevE

Work Order ID 68033

Tuesday, April 05, 2011 2:19:34 PM

Item ID: D350-636-012 **Accept** **Setup Start** **Stop**

Revision ID:

Item Name: Skidtube RH

Start Date: 4/5/2011 **Start Qty:** 1.00 **Cust Item ID:**

Required Date: 4/25/2011 **Req'd Qty:** 1.00 **Customer:**

Reference:

Run Start **Stop**

Approvals: **Process Plan:** _____ **Date:** _____ **Tooling:** _____ **Date:** _____

QC: _____ **Date:** _____ **SPC (Y/N):** _____ **Date:** _____

Sequence ID/ Work Center ID	Operation Description	Set Up/ Run Hours	Tool ID	Tool #	Plan Code	Accept Qty	Reject Qty	Reject Number	Insp. Stamp
220 HandFinish Hand Finishing	HandFinishing	0.00				1	ϕ	M	11/06/06
	Memo Install inserts as per dwg D2750	0.00							
230 HandFinish Hand Finishing	HandFinishing	0.00				1	ϕ	M	11/06/06
	Memo	0.00							

1-Inspect for Foreign Objects

2-Spray inside of tube with "LPS-3"
batch: N/A

3-Install blade fitting D3488-042, wearshoes and ground handling hardware as per dwg D2750
SIKA FLEX 241
BATCH: M116943
EXP DATE: 12/01

4-assemble o'ring to plug as per dwg D3492 and apply o'ring lube
A/R 55-o'ring lube batch: M111189

5-Coat all exposed fasteners with "LPS Procyon"
batch: M114256

Dart Aerospace Ltd

W/O:		WORK ORDER CHANGES					
DATE	STEP	PROCEDURE CHANGE	By	Date	Qty	Approval Chief Eng / Prod Mgr	Approval QC Inspector

Part No: _____ **PAR #:** _____ **Fault Category:** _____ **NCR:** Yes No **DQA:** _____ **Date:** _____

Resolution: _____ **Disposition:** _____ **QA: N/C Closed:** _____ **Date:** _____

NCR:		WORK ORDER NON-CONFORMANCE (NCR)						
DATE	STEP	Description of NC Section A	Corrective Action Section B			Verification Section C	Approval Chief Eng	Approval QC Inspector
			Initial Chief Eng	Action Description Chief Eng	Sign & Date			

NOTE: Date & initial all entries

H:\fFORMS\Quality Assurance\approved QA\NCRWO RevE

Work Order ID 68033

Tuesday, April 05, 2011 2:19:34 PM

Item ID: D350-636-012 **Accept** **Setup Start** **Stop**

Revision ID:

Item Name: Skidtube RH

Start Date: 4/5/2011 **Start Qty:** 1.00 **Cust Item ID:**

Required Date: 4/25/2011 **Req'd Qty:** 1.00 **Customer:**

Reference:

Run Start **Stop**

Approvals: **Process Plan:** _____ **Date:** _____ **Tooling:** _____ **Date:** _____

QC: _____ **Date:** _____ **SPC (Y/N):** _____ **Date:** _____

Sequence ID/ Work Center ID	Operation Description	Set Up/ Run Hours	Tool ID	Tool #	Plan Code	Accept Qty	Reject Qty	Reject Number	Insp. Stamp
240	QC5- Inspect part completeness to step on W/O	0.00							
QC	Memo	0.00							
Quality Control									
250	Pick Kit	0.00							
Packaging	Memo	0.00							
Packaging									
260	QC4- 100% Inspect kits for completeness	0.00							
QC	Memo	0.00							
Quality Control									

Dart Aerospace Ltd

W/O:	WORK ORDER CHANGES						
DATE	STEP	PROCEDURE CHANGE	By	Date	Qty	Approval Chief Eng / Prod Mgr	Approval QC Inspector

Part No: _____ **PAR #:** _____ **Fault Category:** _____ **NCR:** Yes No **DQA:** _____ **Date:** _____

Resolution: _____ **Disposition:** _____ **QA: N/C Closed:** _____ **Date:** _____

NCR:	WORK ORDER NON-CONFORMANCE (NCR)							
DATE	STEP	Description of NC Section A	Corrective Action Section B			Verification Section C	Approval Chief Eng	Approval QC Inspector
			Initial Chief Eng	Action Description Chief Eng	Sign & Date			

NOTE: Date & initial all entries

H:\fFORMS\Quality Assurance\approved QA\NCRWO RevE

Work Order ID 68033

Tuesday, April 05, 2011 2:19:34 PM

Item ID: D350-636-012 **Accept** **Setup Start**

Revision ID: **Stop**

Item Name: Skidtube RH

Start Date: 4/5/2011 **Start Qty:** 1.00 **Cust Item ID:**

Required Date: 4/25/2011 **Req'd Qty:** 1.00 **Customer:**

Reference:

Run Start

Approvals: **Process Plan:** _____ **Date:** _____ **Tooling:** _____ **Date:** _____

Stop

QC: _____ **Date:** _____ **SPC (Y/N):** _____ **Date:** _____

Sequence ID/ Work Center ID	Operation Description	Set Up/ Run Hours	Tool ID	Tool #	Plan Code	Accept Qty	Reject Qty	Reject Number	Insp. Stamp
270		0.00							
Packaging	Packaging								
Packaging	**Memo**	0.00							
Packaging	Package as per PPP D350-636-012								
	New I								
280	QC21- Final Inspection - Work Order Release	0.00							
QC	**Memo**	0.00							
Quality Control									

4/11/07 (C)

11/6/8

CL 11/06/07

Dart Aerospace Ltd

W/O:		WORK ORDER CHANGES					
DATE	STEP	PROCEDURE CHANGE	By	Date	Qty	Approval Chief Eng / Prod Mgr	Approval QC Inspector

Part No: _____ **PAR #:** _____ **Fault Category:** _____ **NCR:** Yes No **DQA:** _____ **Date:** _____

Resolution: _____ **Disposition:** _____ **QA: N/C Closed:** _____ **Date:** _____

NCR:		WORK ORDER NON-CONFORMANCE (NCR)						
DATE	STEP	Description of NC Section A	Corrective Action Section B			Verification Section C	Approval Chief Eng	Approval QC Inspector
			Initial Chief Eng	Action Description Chief Eng	Sign & Date			

NOTE: Date & initial all entries

H:\fFORMS\Quality Assurance\approved QA\NCRWO RevE

Picklist Print

Tuesday, April 05, 2011 2:19:39 PM

10

Work Order ID: 68033

Parent Item: D350-636-012

Parent Item Name: Skidtube RH

Start Date: 4/5/2011 **Required Date:** 4/25/2011

Start Qty: 1.00 **Required Qty:** 1.00

Comments: IPP Rev:I□02.09.25□Rearranged procedure steps□KJ□
IPP Rev:J 06-03-29 As per Rev D EC
IPP Rev:K 06-07.13 As per dsi9343 EC
IPP Rev:L 07-07-28 Added SS Wearplates(Rev E) JLM Verified By:EC
IPP Rev:M 08-04-22 update steps 4,13 DD verified by:EC
IPP Rev:N 08-09-23 revF as per dwg DD verified by:ec IPP Rev:O 10.06.22 revise seq110 DD verf:EC IPP Rev:P 10.10.01 as per IIN revH DD verf:EC

Component Item ID/ Item Name	Replacement Item ID	Mfg/ Purch	Bin Item	Primary Location	Last Location	Route Seq ID	Unit of Measure	Qty on Hand	Qty per Kit	Total Qty	Qty Issued	Date Issued	Status
ALS4-1032-225		Purchased	No			220	Each	1,229.000	38	38			
Insert													

Location		Loc Qty	Loc Code	
FP-B		148		
	110768	148		
ST282		1081		x38
	110768	1081		

Component Item ID/ Item Name	Replacement Item ID	Mfg/ Purch	Bin Item	Primary Location	Last Location	Route Seq ID	Unit of Measure	Qty on Hand	Qty per Kit	Total Qty	Qty Issued	Date Issued	Status
AN3C5A		Purchased	No			230	Each	687.0000	34	34			
Bolt													

Location		Loc Qty	Loc Code	
FP-A		7		
	115835	7		
ST350		680		
	108302	28		
	115422	100		
	116419	452		x34
	116549	100		

Dart Aerospace Ltd

W/O:		WORK ORDER CHANGES					
DATE	STEP	PROCEDURE CHANGE	By	Date	Qty	Approval Chief Eng / Prod Mgr	Approval QC Inspector

Part No: _____ **PAR #:** _____ **Fault Category:** _____ **NCR:** Yes No **DQA:** _____ **Date:** _____

Resolution: _____ **Disposition:** _____ **QA: N/C Closed:** _____ **Date:** _____

NCR:		WORK ORDER NON-CONFORMANCE (NCR)						
DATE	STEP	Description of NC Section A	Corrective Action Section B			Verification Section C	Approval Chief Eng	Approval QC Inspector
			Initial Chief Eng	Action Description Chief Eng	Sign & Date			

NOTE: Date & initial all entries

Picklist Print

Tuesday, April 05, 2011 2:19:39 PM

Work Order ID: 68033

Parent Item: D350-636-012

Parent Item Name: Skidtube RH

Start Date: 4/5/2011 **Required Date:** 4/25/2011

Start Qty: 1.00 **Required Qty:** 1.00

AN3C6A BOLT	Purchased	No	230	Each	272.0000	4	4	M 11/06/06

Location		Loc Qty	Loc Code	
FP-A		41		
	111982	41		
ST351		231		
	111982	6		
	116419	75		
	116549	50		
	116704	100		x4

AN6C44A BOLT	Purchased	No	230	Each	46.0000	4	4	M 11/06/06

Location		Loc Qty	Loc Code	
FG		2	M117407	x4
	103964	2		
ST344		44		
	116874	44		

AN8C35A BOLT	Purchased	No	230	Each	42.0000	1	1	M 11/06/06

Location		Loc Qty	Loc Code	
FP-A		42		
	115188	1		
	115960	18		x1
	116874	23		

AN960C10L washer	NAS1149C0332 R	Purchased	No	230	Each	0.0000	38	38	M117291 (x38) M 11/06/06

Dart Aerospace Ltd

W/O:		WORK ORDER CHANGES					
DATE	STEP	PROCEDURE CHANGE	By	Date	Qty	Approval Chief Eng / Prod Mgr	Approval QC Inspector

Part No: _____ **PAR #:** _____ **Fault Category:** _____ **NCR:** Yes No **DQA:** _____ **Date:** _____

Resolution: _____ **Disposition:** _____ **QA: N/C Closed:** _____ **Date:** _____

NCR:		WORK ORDER NON-CONFORMANCE (NCR)						
DATE	STEP	Description of NC Section A	Corrective Action Section B			Verification Section C	Approval Chief Eng	Approval QC Inspector
			Initial Chief Eng	Action Description Chief Eng	Sign & Date			

NOTE: Date & initial all entries

H:\fFORMS\Quality Assurance\approved QA\NCRWO RevE

Picklist Print

Tuesday, April 05, 2011 2:19:39 PM

Work Order ID: 68033

Parent Item: D350-636-012

Parent Item Name: Skidtube RH

Start Date: 4/5/2011 **Required Date:** 4/25/2011

Start Qty: 1.00 **Required Qty:** 1.00

AN960C816L WASHER	Purchased	No	230	Each	0.0000	1	1	NAS1149C0832R M114915 (x1) JH 11/06/06
D2745 Bushing	Manufactured	No	230	Each	48.0000	8	8	JH 11/06/06

Location	Loc Qty	Loc Code
FP-A	7	
63315	7	B68248 x8
ST021	41	
63315	41	

D3488-042 Blade Fitting Assembly, RH	Manufactured	No	230	Each	17.0000	1	1	JH 11/06/06

Location	Loc Qty	Loc Code
FP008	17	
59643	1	B68109 x1
62003	8	
65099	8	

D3492-041 Plug Assembly	Manufactured	No	230	Each	140.0000	8	8	JH 11/06/06

Location	Loc Qty	Loc Code
FP-B	140	
63994	4	
65068	20	B69531 x8
66937	116	

Dart Aerospace Ltd

W/O:		WORK ORDER CHANGES					
DATE	STEP	PROCEDURE CHANGE	By	Date	Qty	Approval Chief Eng / Prod Mgr	Approval QC Inspector

Part No: _____ **PAR #:** _____ **Fault Category:** _____ **NCR:** Yes No **DQA:** _____ **Date:** _____

Resolution: _____ **Disposition:** _____ **QA: N/C Closed:** _____ **Date:** _____

NCR:		WORK ORDER NON-CONFORMANCE (NCR)						
DATE	STEP	Description of NC Section A	Corrective Action Section B			Verification Section C	Approval Chief Eng	Approval QC Inspector
			Initial Chief Eng	Action Description Chief Eng	Sign & Date			

NOTE: Date & initial all entries

H:\fFORMS\Quality Assurance\approved QA\NCRWO RevE

Picklist Print

Tuesday, April 05, 2011 2:19:39 PM

Work Order ID: 68033

Parent Item: D350-636-012

Parent Item Name: Skidtube RH

Start Date: 4/5/2011 **Required Date:** 4/25/2011

Start Qty: 1.00 **Required Qty:** 1.00

D3492-043	Manufactured	No	230	Each	67.0000	8	8	
Plug Assembly								JH 11/06/06

Location	Loc Qty	Loc Code	
FP-B	67	1368252	x8
66150	8		
66931	59		

D3535-25	Manufactured	No	230	Each	11.0000	1	1	
Wearshoe								JH 11/06/06

Location	Loc Qty	Loc Code	
FP018	11	1368353	x1
62233	1		
65167	10		

D3536-25	Manufactured	No	230	Each	14.0000	1	1	
Gasket								JH 11/06/06

Location	Loc Qty	Loc Code	
FP012	14		
64446	2	1368351	x1
65903	12		

D3537-1	Manufactured	No	230	Each	24.0000	3	3	
Wearpad								JH 11/06/06

Location	Loc Qty	Loc Code	
FP017	24	1368944	x3
63313	2		
65927	22		

Dart Aerospace Ltd

W/O:		WORK ORDER CHANGES					
DATE	STEP	PROCEDURE CHANGE	By	Date	Qty	Approval Chief Eng / Prod Mgr	Approval QC Inspector

Part No: _____ **PAR #:** _____ **Fault Category:** _____ **NCR:** Yes No **DQA:** _____ **Date:** _____

Resolution: _____ **Disposition:** _____ **QA: N/C Closed:** _____ **Date:** _____

NCR:		WORK ORDER NON-CONFORMANCE (NCR)						
DATE	STEP	Description of NC Section A	Corrective Action Section B			Verification Section C	Approval Chief Eng	Approval QC Inspector
			Initial Chief Eng	Action Description Chief Eng	Sign & Date			

NOTE: Date & initial all entries

H:\fFORMS\Quality Assurance\approved QA\NCRWO RevE

Picklist Print

Tuesday, April 05, 2011 2:19:39 PM

Work Order ID: 68033

Parent Item: D350-636-012

Parent Item Name: Skidtube RH

Start Date: 4/5/2011 **Required Date:** 4/25/2011

Start Qty: 1.00 **Required Qty:** 1.00

D3631-1	Manufactured	No	230	Each	100.0000	8	8	
Washer								

Location	Loc Qty	Loc Code	
ST072	100	B63647	x8
66959	100		

D3672-1	Manufactured	No	230	Each	1,387.000	8	8	
Phenolic Washer								

Location	Loc Qty	Loc Code	
FP-A	37		
52505	37		
ST074	1350		
64177	850		x4
66821	500		

D3791-1	Manufactured	No	230	Each	10.0000	1	1	
Wearplate								

Location	Loc Qty	Loc Code	
FP017	10	B68352	x1
62239	10		

D3793-1	Manufactured	No	230	Each	17.0000	1	1	
Wearshoe								

Location	Loc Qty	Loc Code	
FP018	17		
61710	3		
64445	14		x1

Dart Aerospace Ltd

W/O:		WORK ORDER CHANGES					
DATE	STEP	PROCEDURE CHANGE	By	Date	Qty	Approval Chief Eng / Prod Mgr	Approval QC Inspector

Part No: _____ **PAR #:** _____ **Fault Category:** _____ **NCR:** Yes No **DQA:** _____ **Date:** _____

Resolution: _____ **Disposition:** _____ **QA: N/C Closed:** _____ **Date:** _____

NCR:		WORK ORDER NON-CONFORMANCE (NCR)						
DATE	STEP	Description of NC Section A	Corrective Action Section B			Verification Section C	Approval Chief Eng	Approval QC Inspector
			Initial Chief Eng	Action Description Chief Eng	Sign & Date			

NOTE: Date & initial all entries

Picklist Print

Tuesday, April 05, 2011 2:19:39 PM

Work Order ID: 68033

Parent Item: D350-636-012

Parent Item Name: Skidtube RH

Start Date: 4/5/2011 **Required Date:** 4/25/2011

Start Qty: 1.00 **Required Qty:** 1.00

D3793-3	Manufactured	No	230	Each	12.0000	1	1	bl 11/06/06
Wearshoe								

Location	Loc Qty	Loc Code	
FP019	12		
61711	1		
64447	11		XI

D3794-1	Manufactured	No	230	Each	9.0000	1	1	bl 11/06/06
Gasket								

Location	Loc Qty	Loc Code	
FP010	9	1368355	XI
39279	1		
39421	1		
61704	7		

D3794-3	Manufactured	No	230	Each	11.0000	1	1	ll 11/06/06
Gasket								

Location	Loc Qty	Loc Code	
FP018	11		
39422	1		
61712	10		XI

Dart Aerospace Ltd

W/O:		WORK ORDER CHANGES					
DATE	STEP	PROCEDURE CHANGE	By	Date	Qty	Approval Chief Eng / Prod Mgr	Approval QC Inspector

Part No: _____ **PAR #:** _____ **Fault Category:** _____ **NCR:** Yes No **DQA:** _____ **Date:** _____

Resolution: _____ **Disposition:** _____ **QA: N/C Closed:** _____ **Date:** _____

NCR:		WORK ORDER NON-CONFORMANCE (NCR)						
DATE	STEP	Description of NC Section A	Corrective Action Section B			Verification Section C	Approval Chief Eng	Approval QC Inspector
			Initial Chief Eng	Action Description Chief Eng	Sign & Date			

NOTE: Date & initial all entries

H:\fFORMS\Quality Assurance\approved QA\NCRWO RevE

Picklist Print

Tuesday, April 05, 2011 2:19:39 PM

Work Order ID: 68033

Parent Item: D350-636-012

Parent Item Name: Skidtube RH

Start Date: 4/5/2011 **Required Date:** 4/25/2011

Start Qty: 1.00 **Required Qty:** 1.00

MS21043-6 NUT	Purchased	No	230	Each	575.0000	4	4	MH 11/06/06

Location		Loc Qty	Loc Code	
FG		20		
	103693	20		
FP-A		80		
	112314	80		x4
ST301		475		
	112314	475		

MS21083C8 NUT	Purchased	No	230	Each	81.0000	1	1	MH 11/06/06

Location		Loc Qty	Loc Code	
FP-B		11		
	115884	11		
ST303		70		
	115884	0		
	117010	20		
	117291	50		x1

NAS1611-010 O-RING	Purchased	No	230	Each	194.0000	8	8	MH 11/06/06

Location		Loc Qty	Loc Code	
FP-A		194		
	110915	147		
	115589	47		x8

Dart Aerospace Ltd

W/O:		WORK ORDER CHANGES					
DATE	STEP	PROCEDURE CHANGE	By	Date	Qty	Approval Chief Eng / Prod Mgr	Approval QC Inspector

Part No: _____ **PAR #:** _____ **Fault Category:** _____ **NCR:** Yes No **DQA:** _____ **Date:** _____

Resolution: _____ **Disposition:** _____ **QA: N/C Closed:** _____ **Date:** _____

NCR:		WORK ORDER NON-CONFORMANCE (NCR)						
DATE	STEP	Description of NC Section A	Corrective Action Section B			Verification Section C	Approval Chief Eng	Approval QC Inspector
			Initial Chief Eng	Action Description Chief Eng	Sign & Date			

NOTE: Date & initial all entries

H:\fFORMS\Quality Assurance\approved QA\NCRWO RevE

Picklist Print

Tuesday, April 05, 2011 2:19:40 PM

Work Order ID: 68033

Parent Item: D350-636-012

Parent Item Name: Skidtube RH

Start Date: 4/5/2011 **Required Date:** 4/25/2011

Start Qty: 1.00 **Required Qty:** 1.00

NAS1611-013 O-RING	Purchased	No	230	Each	192.0000	8	8	11/06/06

Location	Loc Qty	Loc Code	
FP	187	~~M115845~~	XF
117291	187		
FP-A	5		
116582	5		

8 AN8C21A BOLT	Purchased	No	250	Each	56.0000	2	2	SP

Location	Loc Qty	Loc Code	
ST345	56		
116381	56		2

8 AN960JD816 1/2" washer,Alum	Purchased	No	250	Each	73.0000	2	2	SP

Location	Loc Qty	Loc Code	
FP-A	73		
106043	73		2

8 D2741 Blade, 350 Skidtube	Manufactured	No	250	Each	66.0000	1	1	11/6/7 SP

Location	Loc Qty	Loc Code	
ST466	66		
61341	26		
63589	40		1

Dart Aerospace Ltd

W/O:		WORK ORDER CHANGES					
DATE	STEP	PROCEDURE CHANGE	By	Date	Qty	Approval Chief Eng / Prod Mgr	Approval QC Inspector

Part No: _____ **PAR #:** _____ **Fault Category:** _____ **NCR:** Yes No **DQA:** _____ **Date:** _____

Resolution: _____ **Disposition:** _____ **QA: N/C Closed:** _____ **Date:** _____

NCR:		WORK ORDER NON-CONFORMANCE (NCR)						
DATE	STEP	Description of NC Section A	Corrective Action Section B			Verification Section C	Approval Chief Eng	Approval QC Inspector
			Initial Chief Eng	Action Description Chief Eng	Sign & Date			

NOTE: Date & initial all entries

H:\fFORMS\Quality Assurance\approved QA\NCRWO RevE

Picklist Print

Tuesday, April 05, 2011 2:19:40 PM

Work Order ID: 68033

Parent Item: D350-636-012

Parent Item Name: Skidtube RH

Start Date: 4/5/2011 **Required Date:** 4/25/2011

Start Qty: 1.00 **Required Qty:** 1.00

D3493-1	Manufactured	No	250	Each	61.0000	2	2	
Washer								

Location		Loc Qty	Loc Code
ST062		61	
	62677	21	
	66975	40	2

D3532-1	Manufactured	No	250	Each	23.0000	2	2	
Spacer								

Location		Loc Qty	Loc Code
ST065		23	
	62218	23	2

MS21083C8	Purchased	No	250	Each	81.0000	2	2	11/6/7
NUT								

Location		Loc Qty	Loc Code
FP-B		11	
	115884	11	
ST303		70	
	115884	0	
	117010	20	
	117291	50	2

D2600-3-BENT	Manufactured	No	110	Each	9.0000	1	1	
Extrusion Bent								

Location		Loc Qty	Loc Code
LG	68137	9	1
	66875	9	

BB 11/05/17

Dart Aerospace Ltd

W/O:		WORK ORDER CHANGES					
DATE	STEP	PROCEDURE CHANGE	By	Date	Qty	Approval Chief Eng / Prod Mgr	Approval QC Inspector

Part No: _____ **PAR #:** _____ **Fault Category:** _____ **NCR:** Yes No **DQA:** _____ **Date:** _____

Resolution: _____ **Disposition:** _____ **QA: N/C Closed:** _____ **Date:** _____

NCR:		WORK ORDER NON-CONFORMANCE (NCR)						
DATE	STEP	Description of NC Section A	Corrective Action Section B			Verification Section C	Approval Chief Eng	Approval QC Inspector
			Initial Chief Eng	Action Description Chief Eng	Sign & Date			

NOTE: Date & initial all entries

Picklist Print

Tuesday, April 05, 2011 2:19:40 PM

Work Order ID: 68033

Parent Item: D350-636-012

Parent Item Name: Skidtube RH

Start Date: 4/5/2011 **Required Date:** 4/25/2011

Start Qty: 1.00 **Required Qty:** 1.00

D2744	Manufactured	No	110	Each	45.0000	1	1	BE 11/05/17
Cap								

Location	Loc Qty	Loc Code
LG002	45	
62715	16	
65086	29	

D2739	Manufactured	No	160	Each	6.0000	1	1	
350 I Beam								

Location	Loc Qty	Loc Code
LG 68285	6	
66981	6	

D2743	Manufactured	No	160	Each	17.0000	8	8	BE 11/05/26
Crossbolt Spacer								B 67766 x8

Location	Loc Qty	Loc Code
LG001	17	
64003	17	

D3490-3	Manufactured	No	160	Each	29.0000	4	4	BE 11/05/26
Cross Bolt Spacer								B 68006 x4

Location	Loc Qty	Loc Code
LG001	29	
66968	29	

D3490-1	Manufactured	No	160	Each	23.0000	4	4	BE 11/05/26
Cross Bolt Spacer								B 68105 x4

Location	Loc Qty	Loc Code
LG001	23	
62450	23	

Dart Aerospace Ltd

W/O:		WORK ORDER CHANGES					
DATE	STEP	PROCEDURE CHANGE	By	Date	Qty	Approval Chief Eng / Prod Mgr	Approval QC Inspector

Part No: _____ **PAR #:** _____ **Fault Category:** _____ **NCR:** Yes No **DQA:** _____ **Date:** _____

Resolution: _____ **Disposition:** _____ **QA: N/C Closed:** _____ **Date:** _____

NCR:		WORK ORDER NON-CONFORMANCE (NCR)						
DATE	STEP	Description of NC Section A	Corrective Action Section B			Verification Section C	Approval Chief Eng	Approval QC Inspector
			Initial Chief Eng	Action Description Chief Eng	Sign & Date			

NOTE: Date & initial all entries

H:\fFORMS\Quality Assurance\approved QA\NCRWO RevE

QTY -041	QTY -042	QTY -043	QTY -044	PART NUMBER	DESCRIPTION
X				D2750-041	350 SKIDTUBE ASSEMBLY, LH
	X			D2750-042	350 SKIDTUBE ASSEMBLY, RH
		X		D2750-043	350 SKIDTUBE ASSEMBLY, LH
			X	D2750-044	350 SKIDTUBE ASSEMBLY, RH
1	1	1	1	D2739	WEB
8	8	8	8	D2743	SPACER
1	1	1	1	D2744	CAP
8	8	8	8	D2745	BUSHING
1				D2750-1	SKIDTUBE WELDMENT, LH
	1			D2750-2	SKIDTUBE WELDMENT, RH
		1		D2750-3	SKIDTUBE WELDMENT, LH
			1	D2750-4	SKIDTUBE WELDMENT, RH
1		1		D3488-041	BLADE FITTING, LH
	1		1	D3488-042	BLADE FITTING, RH
4	4	4	4	D3490-1	SPACER
4	4			D3490-3	SPACER
		4	4	D3490-5	SPACER
8	8	8	8	D3492-041	PLUG ASSEMBLY
8	8			D3492-043	PLUG ASSEMBLY
		8	8	D3492-045	PLUG ASSEMBLY
1	1	1	1	D3535-25	WEARSHOE
1	1	1	1	D3536-25	GASKET
3	3	3	3	D3537-1	WEARPAD
8	8	8	8	D3631-1	WASHER
1	1	1	1	D3791-1	WEARPLATE
1	1	1	1	D3793-1	WEARSHOE
1	1	1	1	D3793-3	WEARSHOE
1	1	1	1	D3794-1	GASKET
1	1	1	1	D3794-3	GASKET
38	38	38	38	ALS4-1032-225	INSERT (OR ALS7-1032-225, AKS4-1032-225, AELS-1032-225)
34	34	34	34	AN3C5A	BOLT
4	4	4	4	AN3C6A	BOLT
4	4	4	4	AN6C44A	BOLT
1	1	1	1	AN8C35A	BOLT
38	38	38	38	AN960C10L	WASHER
1	1	1	1	AN960C816L	WASHER
4	4	4	4	MS21043-6	NUT
1	1	1	1	MS21083C8	NUT
4	4	4	4	NAS1515H3L	WASHER

GENERAL NOTES:

1) MATERIAL: MAKE D2750-1/-2/-3/-4 FROM D2600-3 EXTRUSION (INITIAL LENGTH = 120.0).
2) FINISH:
   ACID ETCH, ALONDE ASSEMBLY PER DART QSI 005 4.1 PRIOR TO INSTALLING D2739 WEB.
   POWDER COAT WHITE (REF. 4.3.5.1) PER DART QSI 005 4.3
   BLACK ANTI-SKID PAINT AS INDICATED TO 1.0 ABOVE SKIDTUBE CENTER-LINE PER DART 005 4.4 (OPTIONAL).
3) TOLERANCES: PER DART QSI 018 UNLESS OTHERWISE NOTED
4) UNITS: INCHES UNLESS OTHERWISE NOTED
5) BREAK SHARP EDGES: N/A
6) IDENTIFICATION: N/A
7) WEIGHT: D2750-041/-042/-043/-044 = 26.5 LBS
8) WELD PER DART QSI 004
9) INSTALL ALS4-1032-225 INSERTS AFTER FINISH AS INDICATED. DRILL 'F' SIZE HOLES (Ø0.297) FOR WEARSHOE INSERTS
10) FINAL CONFIGURATION SHOULD HAVE THE FOLLOWING MINIMUM MECHANICAL PROPERTIES:
    MINIMUM YIELD TENSILE STRENGTH = 35 KSI
    MINIMUM ULTIMATE TENSILE STRENGTH = 38 KSI
11) SPRAY INSIDE OF TUBE WITH A COAT OF LPS LABORATORIES "LPS-3" AFTER FINISH AND AFTER INSTALLATION OF INSERTS. COAT ALL EXPOSED FASTENERS WITH LPS LABORATORIES "LPS PROCYON" AFTER FINAL ASSEMBLY, CLEAN EXCESS OFF POWDER COATING WITH MEK DEGREASER.
12) SPACER AND PLUG INSTALLED SAME AS SECTION AJ-AJ EXCEPT HORIZONTAL (F)
13) SPACER AND PLUG INSTALLED SAME AS SECTION AP-AP EXCEPT HORIZONTAL

RELEASED

REV.	DESCRIPTION	BY	DATE
F	INCORPORATE DSI 9413; QTY (3) D3537-1 WAS QTY (5) (ZN C8-1); D3791-1/-3 REPLACES D3535-13/-35 (ZN C8-1); D3794-1/-3 REPLACES D3536-13/-35 (ZN B8-1); ADD D3791-1 (ZN C8-1); WEARSHOE HOLES UNDER FWD/AFT SADDLE REMOVED (8 PL). WEARSHOE HARDWARE QTY UPDATED (ZN B8-1); D3488-041/-042 HARDWARE UPDATED (ZN C1-8, 9, 10, 11); ADD NOTE 12 AND 13 (ZN A6-1); REASON: REF. NCR 08-043	PH	08.07.16
E	CHANGE TO STAINLESS STEEL WEARPLATES; ADD RUBBER GASKETS; CHANGE INSERTS; ADD D3831-1; REMOVE QTY (38) NAS1515H3L; REMOVE QTY (10) NAS1515H8L; REMOVE D2741, QTY (2) AN960C816; REMOVE QTY (2) MS21083C8	CB	07.05.17
D	ADD HOLES AND SPACERS FOR APICAL FLOATS; INCORPORATE DEO 9133/9157	PH	06.01.05
C	ADD D2750-3/D2750-4; INCORPORATE D2738 AND D2740	CP	98.11.18
B	CHANGE MS24694-S293 TO AN8-16A	CP	98.09.01
A	NEW ISSUE	DS	98.04.16

DESIGN	PH
DRAWN	PH
CHECKED	
MFG. APPR.	
APPROVED	
DE APPR.	
DATE	08.07.16

DART AEROSPACE USA, INC.
PORT HADLOCK, WA

DRAWING NO. D2750 REV. F
SHEET 1 OF 11

TITLE: 350 SKIDTUBE ASSEMBLY
SCALE: NTS

COPYRIGHT © 1998 BY DART AEROSPACE USA, INC.
THIS DOCUMENT IS PRIVATE AND CONFIDENTIAL AND IS SUPPLIED ON THE EXPRESS CONDITION THAT IT IS NOT TO BE USED FOR ANY PURPOSE OR COPIED OR COMMUNICATED TO ANY OTHER PERSON WITHOUT WRITTEN PERMISSION FROM DART AEROSPACE USA, INC.

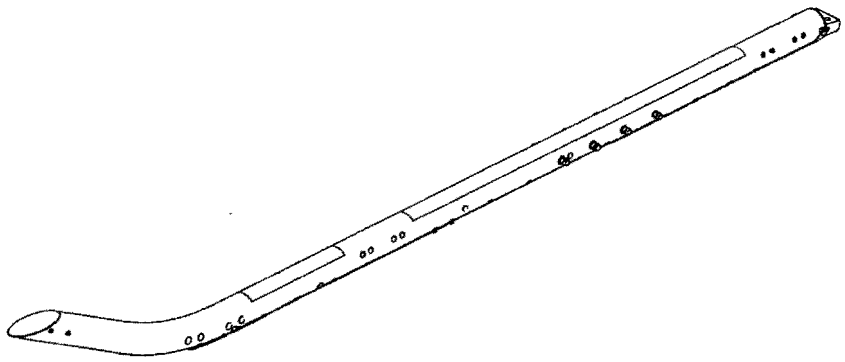

D2750-041 350 SKIDTUBE ASSEMBLY, LH

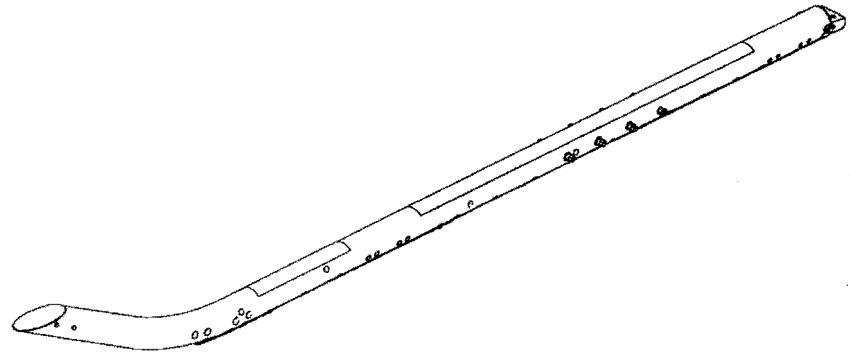

D2750-042 350 SKIDTUBE ASSEMBLY, RH

RELEASED

DESIGN		DART AEROSPACE USA, INC. PORT HADLOCK, WA
DRAWN		
CHECKED		DRAWING NO. D2750 — REV. F — SHEET 2 OF 11
MFG. APPR.		
APPROVED		TITLE 350 SKIDTUBE ASSEMBLY — SCALE NTS
DE APPR.		
DATE 08.07.16		

COPYRIGHT © 1998 BY DART AEROSPACE USA, INC.
THIS DOCUMENT IS PRIVATE AND CONFIDENTIAL AND IS SUPPLIED ON THE EXPRESS CONDITION THAT IT IS NOT TO BE USED FOR ANY PURPOSE, OR COPIED OR COMMUNICATED TO ANY OTHER PERSON WITHOUT WRITTEN PERMISSION FROM DART AEROSPACE USA, INC.

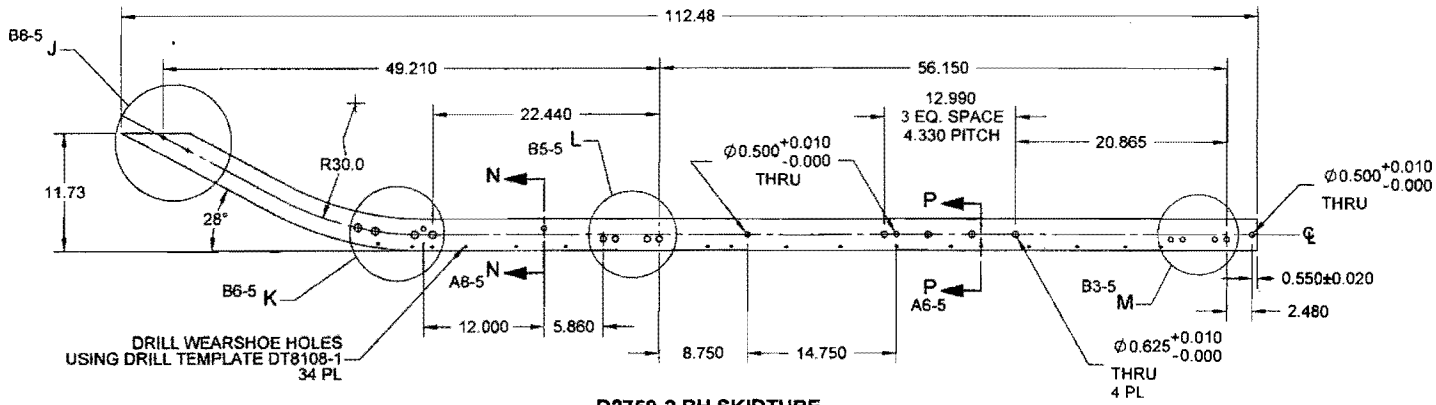

D2750-2 RH SKIDTUBE

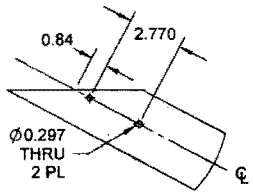

D8-5
DETAIL J
SCALE 2X

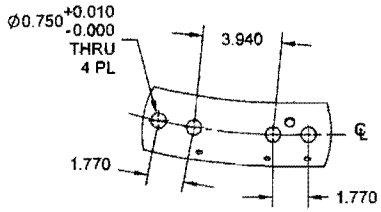

C7-5
DETAIL K
SCALE 2X

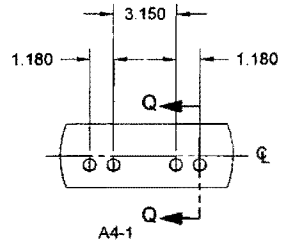

D6-5
DETAIL L
SCALE 2X

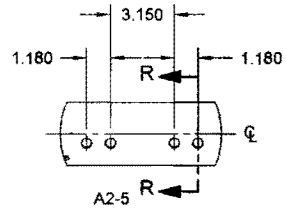

C3-5
DETAIL M
SCALE 2X

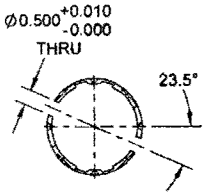

C6-5
SECTION N-N
SCALE 3X, 2 PL

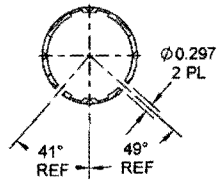

C4-5
SECTION P-P
SCALE 3X, 17 PL

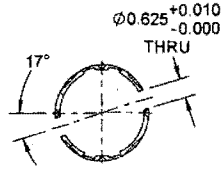

B5-5
SECTION Q-Q
SCALE 3X, 4 PL

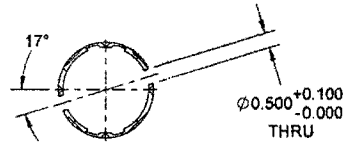

B3-5
SECTION R-R
SCALE 3X, 4 PL

RELEASED
08.22.16

DESIGN	RW	**DART AEROSPACE USA, INC.** PORT HADLOCK, WA
DRAWN	RW	
CHECKED		DRAWING NO. D2750 — REV. F — SHEET 5 OF 11
MFG. APPR.		
APPROVED		TITLE: 350 SKIDTUBE ASSEMBLY — SCALE: NTS
DE APPR.		
DATE	08.07.16	

COPYRIGHT © 1998 BY DART AEROSPACE USA, INC.
THIS DOCUMENT IS PRIVATE AND CONFIDENTIAL AND IS SUPPLIED ON THE EXPRESS CONDITION THAT IT SHALL NOT BE USED FOR ANY PURPOSE OR COPIED OR COMMUNICATED TO ANY OTHER PERSON WITHOUT WRITTEN PERMISSION FROM DART AEROSPACE USA, INC.

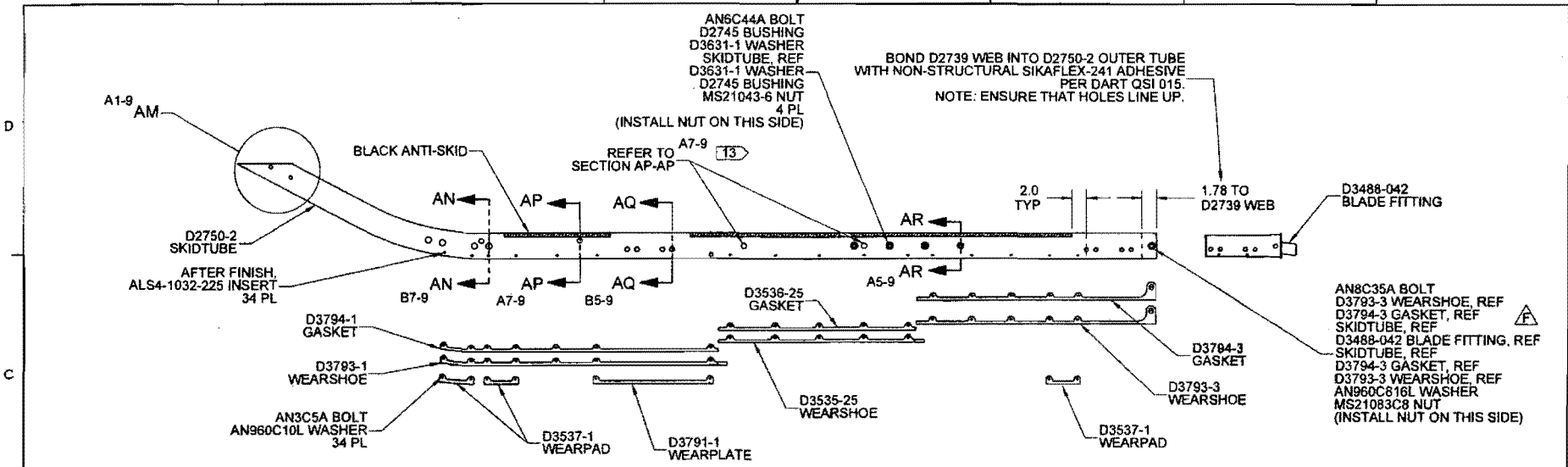

D2750-042 350 SKIDTUBE ASSEMBLY, RH

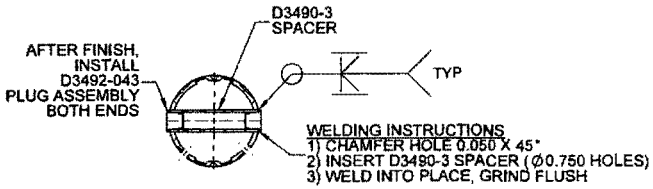

SECTION AN-AN C7-9
SCALE 3X, 4 PL

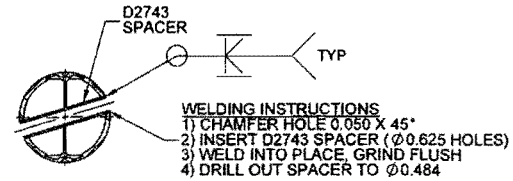

SECTION AQ-AQ C5-9
SCALE 3X, 4 PL

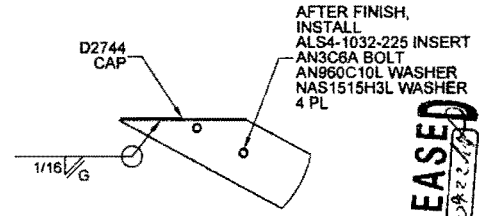

DETAIL AM D8-9
SCALE 2X

RELEASED

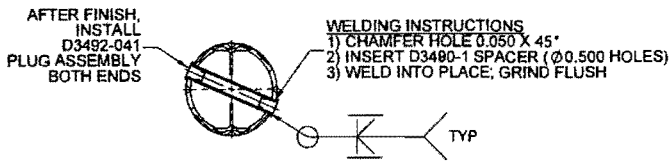

SECTION AP-AP C6-9, D5-9
SCALE 3X, 4 PL

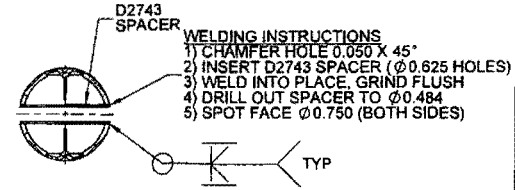

SECTION AR-AR C4-9
SCALE 3X, 4 PL
(HARDWARE REMOVED FOR CLARITY)

DESIGN		DART AEROSPACE USA, INC. PORT HADLOCK, WA
DRAWN		
CHECKED		DRAWING NO. D2750 — REV. F — SHEET 9 OF 11
MFG. APPR.		
APPROVED		TITLE: 350 SKIDTUBE ASSEMBLY — SCALE: NTS
DE APPR.		
DATE	08.07.16	

COPYRIGHT © 1998 BY DART AEROSPACE USA, INC.
THIS DOCUMENT IS PRIVATE AND CONFIDENTIAL AND IS SUPPLIED ON THE EXPRESS CONDITION THAT IT IS NOT TO BE USED FOR ANY PURPOSE OR COPIED OR COMMUNICATED TO ANY OTHER PERSON WITHOUT WRITTEN PERMISSION FROM DART AEROSPACE USA INC.

NO. 253

AWS D17.1.2001
QUALIFICATION TEST RECORD

Name: Barclay Elliot
Job number: 67621
Part number: D350·636·011
Description: 350
Welding Process: Tig[X] Mig[ ]
Base materiel: Aluminum
Current: AC[X] DC[ ]

TEST REQUIREMENTS AND RESULTS

Visual:	pass[X]	fail[ ]
Penetration:	pass[X]	fail[ ]

UNACCEPTABLE

Cracks:	pass[X]	fail[ ]
Undercut:	pass[X]	fail[ ]
Pin holes:	pass[X]	fail[ ]
Overlap (cold lap)	pass[X]	fail[ ]
Porosity (surface):	pass[X]	fail[ ]
Coloration:	pass[X]	fail[ ]

Qualifier Rob Lewis **Date of Test Coupon** 11·05·19

Welder Barclay Elliot **Date of Test Coupon** 11·05·19

The above named individual is qualified in accordance with AWS D17.1.2001 to weld